American National Carbide

Delivering Carbide Value

Parting / Cut-Off

915 South Cherry Street
Tomball, Texas U.S.A. 77375
(281) 351-7165 • (800) 331-7585
FAX: (281) 255-9333
www.anconline.com

ANC makes a complete line of cut-off / parting inserts designed to be interchangeable with GTR, GTL, and GTN-style Self Grip® inserts from Iscar®. These inserts are available in cutting widths from 2mm (.087”) to 6mm (.250”) and face angles from 0 to 15 degrees. Choose from our select offering of state of the art cobalt-enriched uncoated or PVD and CVD coated grades specially formulated for parting applications spanning a broad range of workpiece materials, from steels to cast irons. Blade-style and standard toolholders are also available

As a vertically integrated company, ANC controls each of its manufacturing processes from powder to finished product. Using advanced quality assurance methods and continuous improvement throughout the facility guarantees that each product meets a customer's exact specifications.

Short production lead times, quality-focused manufacturing processes, and flexibility in new product design and tooling production make ANC a preferred choice for strategic partnerships.

Call our Customer Service and Support line today to see how ANC can improve your bottom line.

Grade and Application Data

PVD COATED

Grade	ISO Class	Industry Class	Description	Coating
AN2120 Roughing to Semi-Finishing	P30-P40 M25-M35	C5	AN2120 is based on a very tough alloyed substrate with a thin PVD coating of TiN. Suitable for parting at low to medium cutting speeds in unfavorable conditions.	 TiN Substrate

CVD COATED

Grade	ISO Class	Industry Class	Description	Coating
AN3010 Roughing to Semi-Finishing	K10-K25 N10-N20 H20-H30	C2	AN3010 is based on a tough, alloyed substrate CVD coated with a TiCN and Al_2O_3 coating. This combination makes AN3010 the preferred grade for high speed operations on all cast irons.	 Al_2O_3 TiCN Substrate
AN4030 Roughing to Semi-Finishing	P30-P40 M25-M35	C5	AN4030 has a very tough alloyed, cobalt-enriched substrate with a multi-layered TiN/TiC/TiCN/TiN coating. The preferred general purpose grade for parting and grooving at medium to high cutting speeds.	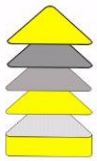 TiN TiCN TiC TiN Substrate
AN4045 Roughing, Interrupted Cuts	P30-P45 M25-M40	C5	AN4045 is an extremely tough grade with a four layer coating of TiN, TiC, TiCN, and TiN. This is an excellent grade for machining at low cutting speeds and very high feed rates in severe interrupted cuts. Designed for heavy roughing of steels and stainless steels.	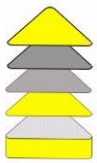 TiN TiCN TiC TiN Substrate

UNCOATED

Grade	ISO Class	Industry Class	Description
AN28 Roughing to Finishing	K15-K30 N10-N20	C2	AN28 is an uncoated, alloyed substrate specifically designed for roughing to finishing operations on cast irons and non-ferrous materials. First choice for nodular cast iron.
AN50 Roughing, Interrupted Cuts	P30-P40 M25-M35	C5	AN50 is a very tough uncoated alloyed grade suitable for roughing operations on a wide variety of steels, including stainless. Performs well at low to medium cutting speeds with medium to high feed rates and handles severe interrupted cuts.

Grade and Application Data

P	Steel alloys, cast steels, ferritic and martensitic stainless steels, and long chipping malleable irons

C8	C7	C6	C5											
P01	P10	P20	P30	P40	M01	M10	M20	M30	M40	K01	K10	K20	K30	K40
			AN4030					AN4030			AN3010			
			AN4045					AN4045				AN28		
			AN2120					AN2120						
			AN50					AN50						
More Wear ←				→ More Toughness	More Wear ←				→ More Toughness	More Wear ←				→ More Toughness

M	Austenitic stainless steel, free machining steel, manganese steel, alloy cast iron, and malleable iron

K	Cast iron and short chipping malleable iron

N	Non-ferrous metals, plastics, and wood

H	Hard materials, such as chilled cast iron, hardened steel and hardened cast iron

N01	N10	N20	N30	N40	H01	H10	H20	H30	H40
	AN3010						AN3010		
	AN28								
More Wear ←				→ More Toughness	More Wear ←				→ More Toughness

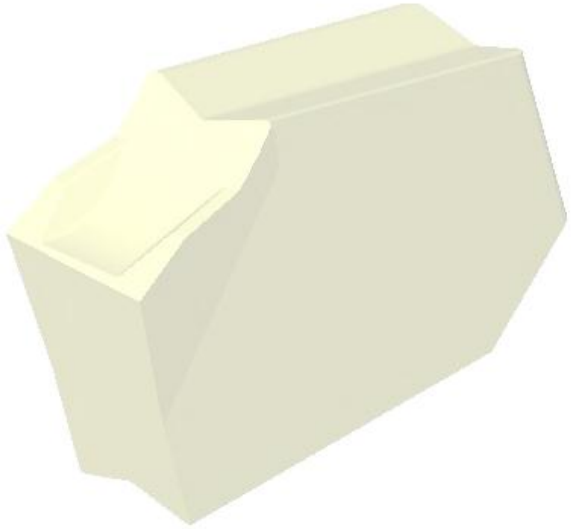

PARTING / CUT-OFF

interchangeable with Iscar Self-Grip® GTN, GTL, and GTR-style inserts

	Part Number	Coated				Uncoated		Dimensions	
		AN2120	AN3010	AN4030	AN4045	AN28	AN50	Face Angle	Cutting Width
ANN General Machining — Neutral 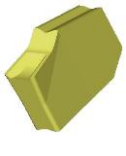 	ANN 2	•	•	•	•	•	•	-	.087″ (2mm)
	ANN 2.4	•	•	•	•	•	•	-	.094″ (2.4mm)
	ANN 3	•	•	•	•	•	•	-	.120″ (3mm)
	ANN 4	•	•	•	•	•	•	-	.160″ (4mm)
	ANN 4.8	•	•	•	•	•	•	-	.187″ (4.8mm)
	ANN 5	•	•	•	•	•	•	-	.200″ (5mm)
	ANN 6	•	•	•	•	•	•	-	.250″ (6mm)
	ANN 9	•	•	•	•	•	•	-	.375″ (9mm)
ANL General Machining — Left Hand  	ANL 2-3	•	•	•	•	•	•	3°	.087″ (2mm)
	ANL 2-8	•	•	•	•	•	•	8°	.087″ (2mm)
	ANL 2.4-3	•	•	•	•	•	•	3°	.094″ (2.4mm)
	ANL 2.4-8	•	•	•	•	•	•	8°	.094″ (2.4mm)
	ANL 3-3	•	•	•	•	•	•	3°	.120″ (3mm)
	ANL 3-8	•	•	•	•	•	•	8°	.120″ (3mm)
	ANL 3-15	•	•	•	•	•	•	15°	.120″ (3mm)
	ANL 4-3	•	•	•	•	•	•	3°	.160″ (4mm)
	ANL 4-8	•	•	•	•	•	•	8°	.160″ (4mm)
	ANL 4-15	•	•	•	•	•	•	15°	.160″ (4mm)
	ANL 4.8-3	•	•	•	•	•	•	3°	.187″ (4.8mm)
	ANL 4.8-8	•	•	•	•	•	•	8°	.187″ (4.8mm)
	ANL 5-3	•	•	•	•	•	•	3°	.200″ (5mm)
	ANL 5-8	•	•	•	•	•	•	8°	.200″ (5mm)
	ANL 6-3	•	•	•	•	•	•	3°	.250″ (6mm)
	ANL 6-8	•	•	•	•	•	•	8°	.250″ (6mm)
ANR General Machining — Right Hand  	ANR 2-3	•	•	•	•	•	•	3°	.087″ (2mm)
	ANR 2-8	•	•	•	•	•	•	8°	.087″ (2mm)
	ANR 2-15	•	•	•	•	•	•	15°	.087″ (2mm)
	ANR 2.4-3	•	•	•	•	•	•	3°	.094″ (2.4mm)
	ANR 2.4-8	•	•	•	•	•	•	8°	.094″ (2.4mm)
	ANR 3-3	•	•	•	•	•	•	3°	.120″ (3mm)
	ANR 3-8	•	•	•	•	•	•	8°	.120″ (3mm)
	ANR 3-15	•	•	•	•	•	•	15°	.120″ (3mm)
	ANR 4-3	•	•	•	•	•	•	3°	.160″ (4mm)
	ANR 4-8	•	•	•	•	•	•	8°	.160″ (4mm)
	ANR 4-15	•	•	•	•	•	•	15°	.160″ (4mm)
	ANR 4.8-3	•	•	•	•	•	•	3°	.187″ (4.8mm)
	ANR 4.8-8	•	•	•	•	•	•	8°	.187″ (4.8mm)
	ANR 5-3	•	•	•	•	•	•	3°	.200″ (5mm)
	ANR 5-8	•	•	•	•	•	•	8°	.200″ (5mm)
	ANR 6-3	•	•	•	•	•	•	3°	.250″ (6mm)
	ANR 6-8	•	•	•	•	•	•	8°	.250″ (6mm)

NOTE: Designated trademarks and brands are the property of their respective owners. ANC is not an authorized Iscar distributor or affiliated in any way with Iscar. Iscar does not sponsor or endorse ANC products. ANC is an independent manufacturer of carbide products.

AGIH

Use Parting / Cut-Off Inserts
ANN, ANR, ANL

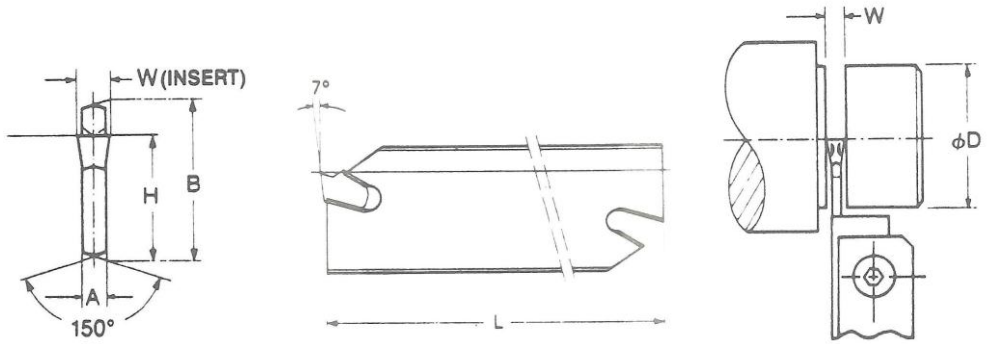

Part Number	Dimensions (inches)					
	W (Insert)	D Max.	A	L	H	B
AGIH19-2	.087–.094	1-1/2	1/16	3-3/8	39/64	3/4
AGIH26-2	.087–.094	3	1/16	4-5/16	53/64	1-1/32
AGIH26-3	.120	3	3/32	4-5/16	53/64	1-1/32
AGIH26-4	.160	3	1/8	4-5/16	53/64	1-1/32
AGIH26-5	.187-.200	3	5/32	4-5/16	53/64	1-1/32
AGIH26-6	.250	3	13/64	4-5/16	53/64	1-1/32
AGIH32-3	.120	4	3/32	5-7/8	63/64	1-1/4
AGIH32-4	.160	4	1/8	5-7/8	63/64	1-1/4
AGIH32-5	.187-.200	5	5/32	5-7/8	63/64	1-1/4
AGIH32-6	.250	5	13/64	5-7/8	63/64	1-1/4
AGIH32-9	.375	5	5/16	5-7/8	63/64	1-1/4

CTTBN

Use Parting / Cut-Off Blade
AGIH

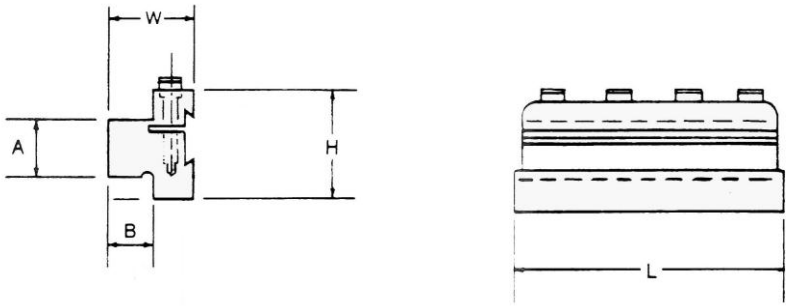

Part Number	Dimensions (inches)					
	Blade Reference	A	B	H	W	L
CTTBN16-2	AGIH19-2	5/8	5/8	1-3/16	1-1/64	3-7/16
CTTBN16-5	AGIH26-2, 3, 4, 5, 6	5/8	5/8	1-1/2	1-5/16	3-7/16
CTTBN19-5	AGIH26-2, 3, 4, 5, 6	3/4	3/4	1-1/2	1-7/16	3-7/16
CTTBN25-6	AGIH32-3, 4, 5, 6	1	25/32	1-7/8	1-13/16	4-5/16
CTTBN32-6	AGIH32-3, 4, 5, 6	1-1/4	1-1/8	1-7/8	1-13/16	4-5/16

NOTE: Designated trademarks and brands are the property of their respective owners. ANC is not an authorized Iscar distributor or affiliated in any way with Iscar. Iscar does not sponsor or endorse ANC products. ANC is an independent manufacturer of carbide products.

CTTHR/L

Use Parting / Cut-Off Inserts ANN, ANR, ANL

Left and right hand versions of this toolholder are available – see "R" and "L" in part number

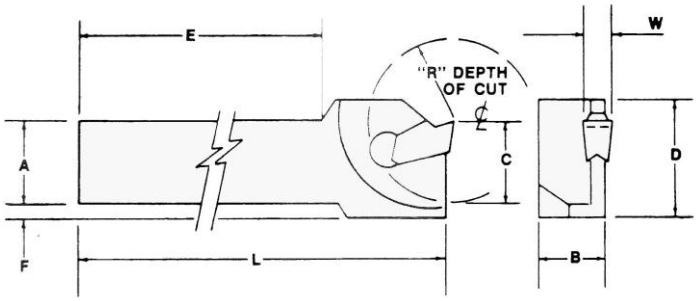

Part Number	Dimensions (inches)									
	W	Insert Reference	A	B	C	D	E	F	L	R
CTTHR/L10-2	.087-.094	ANx-2, 2.4	25/64	3/8	25/64	3/4	2-3/4	3/16	3-3/8	1-7/64
CTTHR/L12-2	.087-.094	ANx-2, 2.4	15/32	25/64	15/32	3/4	3-37/64	5/32	4-21/64	1-11/64
CTTHR/L16-2	.087-.094	ANx-2, 2.4	5/8	25/64	5/8	3/4	3-37/64	0	4-21/64	1-11/64
CTTHR/L16-3	.120	ANx-3	5/8	15/32	5/8	15/16	3-29/64	11/64	4-21/64	1-17/64
CTTHR/L16-4	.160	ANx-4	5/8	15/32	5/8	15/16	3-29/64	11/64	4-21/64	1-21/64
CTTHR/L19-4	.160	ANx-4	3/4	15/32	3/4	15/16	3-29/64	1/16	4-21/64	1-17/32
CTTHR/L16-5	.187-.200	ANx-4.8, 5	3/4	15/32	3/4	15/16	4-7/16	3/64	4-21/64	1-17/64

NOTE: Designated trademarks and brands are the property of their respective owners. ANC is not an authorized Iscar distributor or affiliated in any way with Iscar. Iscar does not sponsor or endorse ANC products. ANC is an independent manufacturer of carbide products.